SWINBURNE UNIVERSITY OF TECHNOLOGY

The NBN Experience:

The Interwebs at the Speed of Light

Jason But

jbut@swin.edu.au

Centre for Advanced Internet Architectures (CAIA)
Swinburne University of Technology

Outline

- NBN Nuts and Bolts
- What happens during an install
- The User experience – what happens after an install

HOW THE NBNCo Limited WORKS IN TWO SLIDES

NBN – Big Picture View

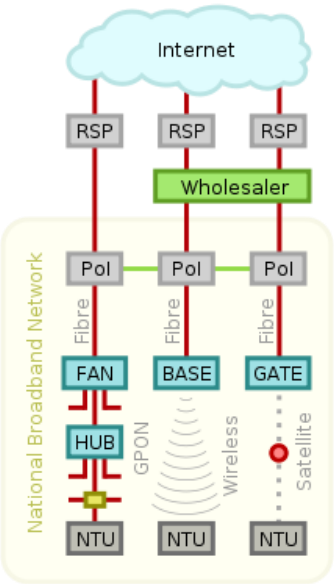

- 121 Points of Interconnect – where ISPs connect to the NBN
- Feed out to the FANs – Active nodes which service a local area (likely an exchange)
- FANs feed multiple loop networks with multiple Hubs/loop
- Each Hub feeds a set of end-users

From the Exchange to the Curb

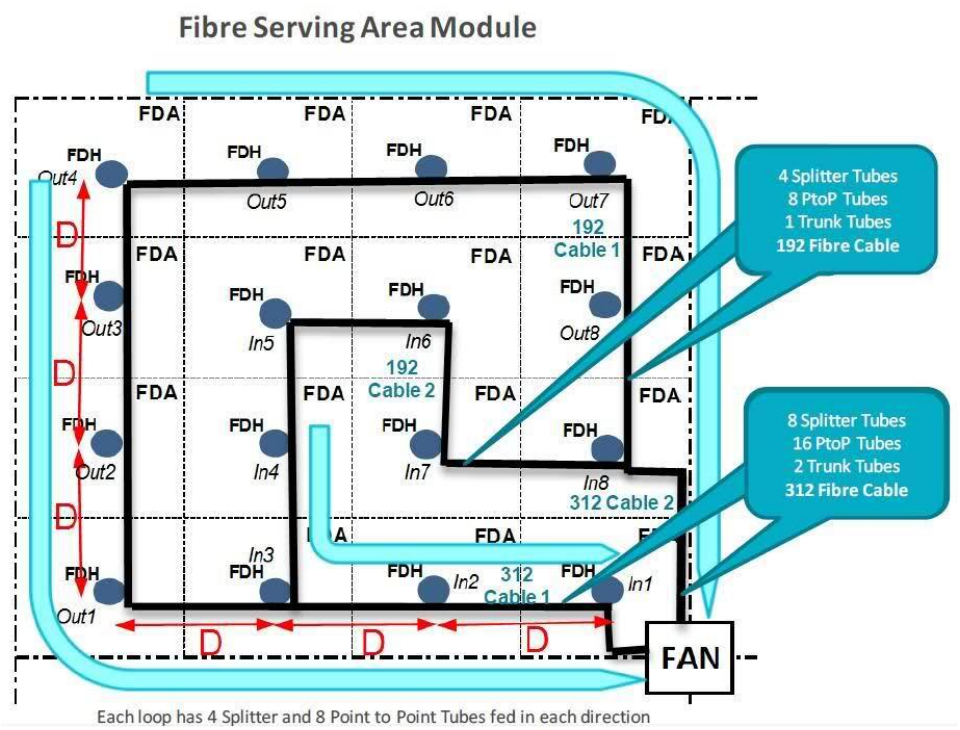

THE INSTALLATION EXPERIENCE

NBN Fibre Distribution Hub

NBN Fibre Distribution Hub

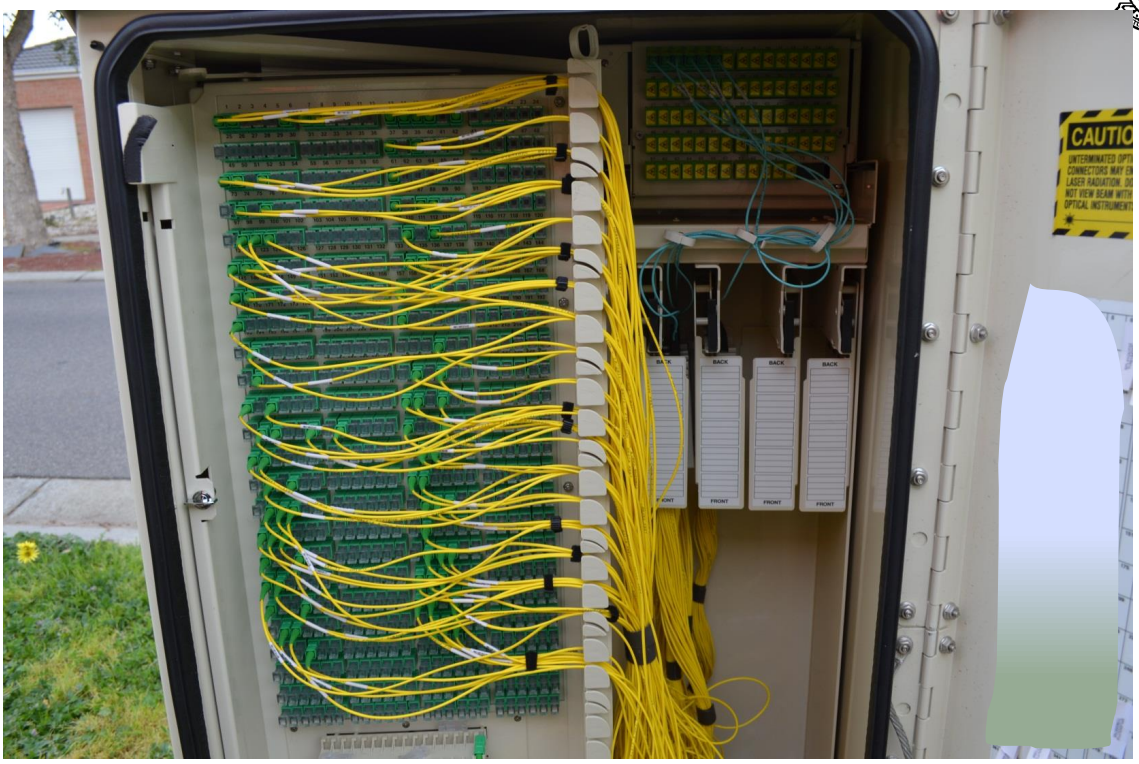

NBN Fibre Distribution Hub

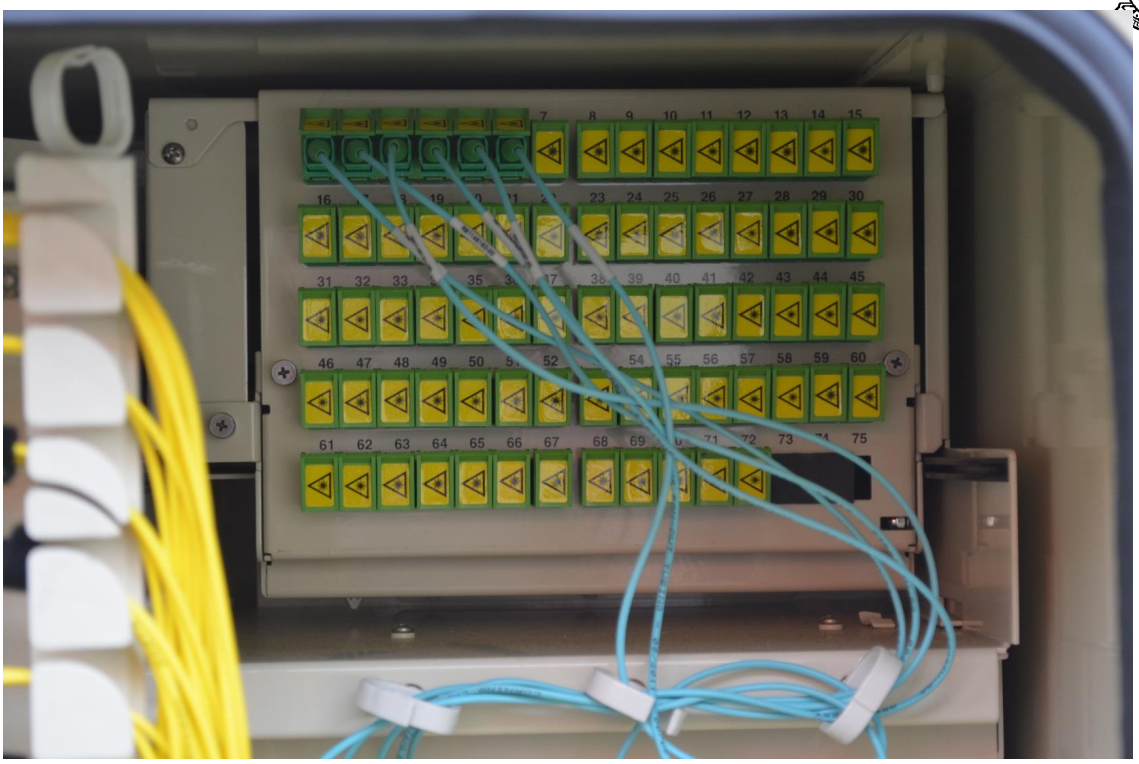

NBN Fibre Distribution Hub

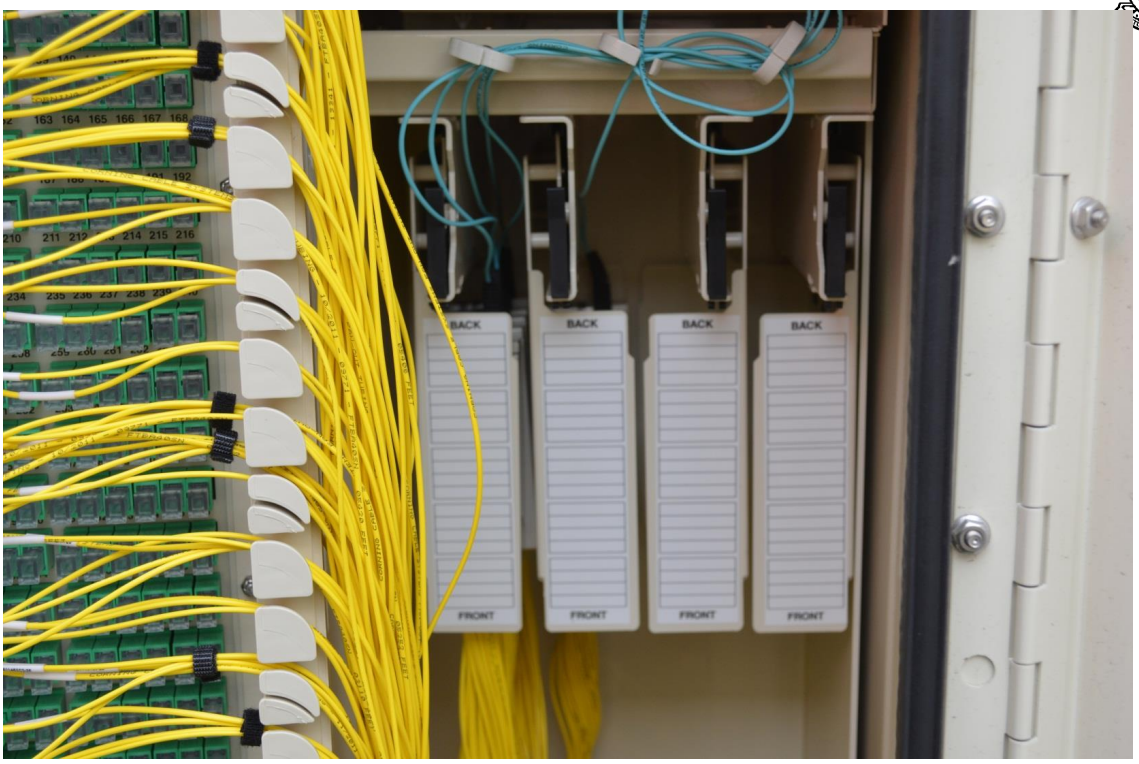

Before the Local Install

NBN External Patch Enclosure

Fibre run Inside House

Comms Cupboard Prior to Works

Patch Lead Pulled Through

Cleaning the Fibre Tail

Attaching the Connector, no splicing here


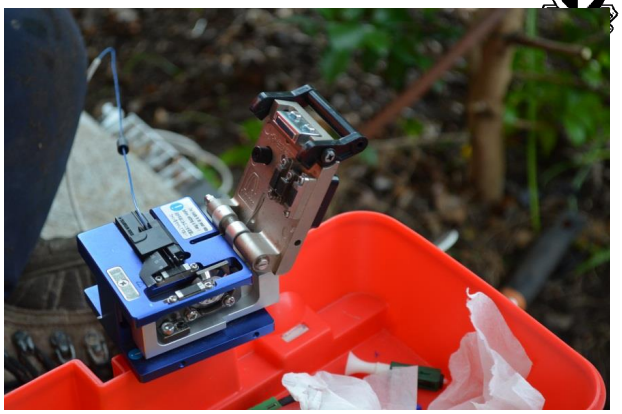

Connecting the Internal Patch Lead

Job Complete

External works completed

NBN Network Termination Unit

NTU Installed, now for the UPS

All installed, covers removed

The finished install

THE USER EXPERIENCE

Home Configuration

- NBN Connected to a Linux Server/Router
  - Intel(R) Core(TM) i5-2500K CPU @ 3.30GHz (Quadcore)
  - 16GB RAM
  - 2 x RealTek RTL8111/8168 Gb Ethernet NICs
- PPP terminated at server
  - http://www.roaringpenguin.com/pppoe/
- LAN Connections
  - 100Mbps Ethernet
  - 802.11g Wireless connectivity

Ping tests – Gateway Router

```
server ~ # netstat -nr
Kernel IP routing table
Destination     Gateway         Genmask         Flags   MSS Window  irtt Iface
0.0.0.0         150.101.212.44  0.0.0.0         UG        0 0          0 ppp0
127.0.0.0       127.0.0.1       255.0.0.0       UG        0 0          0 lo
150.101.212.44  0.0.0.0         255.255.255.255 UH        0 0          0 ppp0
192.168.101.0   0.0.0.0         255.255.255.0   U         0 0          0 ethLAN
server ~ # ping -n -c 5 150.101.212.44
PING 150.101.212.44 (150.101.212.44) 56(84) bytes of data.
64 bytes from 150.101.212.44: icmp_seq=1 ttl=255 time=4.47 ms
64 bytes from 150.101.212.44: icmp_seq=2 ttl=255 time=3.96 ms
64 bytes from 150.101.212.44: icmp_seq=3 ttl=255 time=3.83 ms
64 bytes from 150.101.212.44: icmp_seq=4 ttl=255 time=13.5 ms
64 bytes from 150.101.212.44: icmp_seq=5 ttl=255 time=6.76 ms

--- 150.101.212.44 ping statistics ---
5 packets transmitted, 5 received, 0% packet loss, time 4006ms
rtt min/avg/max/mdev = 3.834/6.526/13.588/3.686 ms
```


Ping tests – Swinburne

```
server ~ # ping -n -c 5 www.swin.edu.au
PING www.swin.edu.au (136.186.1.10) 56(84) bytes of data.
64 bytes from 136.186.1.10: icmp_seq=1 ttl=57 time=5.37 ms
64 bytes from 136.186.1.10: icmp_seq=2 ttl=57 time=5.47 ms
64 bytes from 136.186.1.10: icmp_seq=3 ttl=57 time=5.02 ms
64 bytes from 136.186.1.10: icmp_seq=4 ttl=57 time=4.96 ms
64 bytes from 136.186.1.10: icmp_seq=5 ttl=57 time=5.20 ms

--- www.swin.edu.au ping statistics ---
5 packets transmitted, 5 received, 0% packet loss, time 4004ms
rtt min/avg/max/mdev = 4.961/5.208/5.471/0.211 ms
```

Ping tests – UCLA (USA)

```
server ~ # ping -n -c 5 www.ucla.edu
PING www.ucla.edu (128.97.27.37) 56(84) bytes of data.
64 bytes from 128.97.27.37: icmp_seq=1 ttl=51 time=172 ms
64 bytes from 128.97.27.37: icmp_seq=2 ttl=51 time=185 ms
64 bytes from 128.97.27.37: icmp_seq=3 ttl=51 time=173 ms
64 bytes from 128.97.27.37: icmp_seq=4 ttl=53 time=173 ms
64 bytes from 128.97.27.37: icmp_seq=5 ttl=53 time=203 ms

--- www.ucla.edu ping statistics ---
5 packets transmitted, 5 received, 0% packet loss, time 4006ms
rtt min/avg/max/mdev = 172.641/181.811/203.581/11.843 ms
```


Ping tests – Oxford (UK)

```
server ~ # ping -n -c 5 www.ox.ac.uk
PING www.ox.ac.uk (163.1.60.42) 56(84) bytes of data.
64 bytes from 163.1.60.42: icmp_seq=1 ttl=49 time=310 ms
64 bytes from 163.1.60.42: icmp_seq=2 ttl=49 time=328 ms
64 bytes from 163.1.60.42: icmp_seq=3 ttl=47 time=300 ms
64 bytes from 163.1.60.42: icmp_seq=4 ttl=49 time=299 ms
64 bytes from 163.1.60.42: icmp_seq=5 ttl=49 time=304 ms

--- www.ox.ac.uk ping statistics ---
5 packets transmitted, 5 received, 0% packet loss, time 4005ms
rtt min/avg/max/mdev = 299.616/308.681/328.859/10.753 ms
```

Speed Test – File Download

```
server ~ # wget http://mirror.internode.on.net/pub/test/1000meg.test
--2013-10-02 00:47:18--  http://mirror.internode.on.net/pub/test/1000meg.test
Resolving mirror.internode.on.net... 150.101.135.3
Connecting to mirror.internode.on.net|150.101.135.3|:80... connected.
HTTP request sent, awaiting response... 200 OK
Length: 1000000000 (954M) [application/octet-stream]
Saving to: '1000meg.test'

100%[===============================>] 1,000,000,000 2.81MB/s   in 5m 43s

2013-10-02 00:53:02 (2.78 MB/s) - '1000meg.test' saved [1000000000/1000000000]
```

23.32 Mbps goodput (as measured by 1000*1000 = M)

Download Speed – tcpdump capture

- Midstream capture
  - Mean inter-arrival time: 0.47ms (min 0.002ms, max 1.474ms)
  - Ethernet capture details
    - 1492 bytes total (20 Eth, 8 PPP, 20 IP, 32 TCP, 1408 payload)
    - Implies MTU = 1464 ???
  - Measuring Ethernet data transmitted = 25.24 Mbps
  - Measuring PPP data transmitted = 24.99 Mbps

Speed Test – www.speedtest.net

- Flash based app from browser
- Running on laptop connected to home LAN via wireless

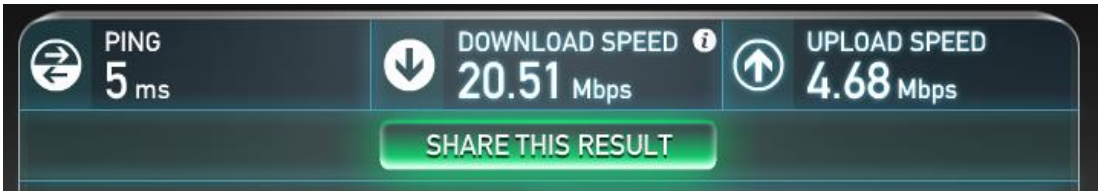

Download Speed – tcpdump capture

- Speedtest uses TCP
  - (Potentially) hampered by Flash and Wireless
- Captured packet sizes = 1474 (14 Eth, 20 IP, 32 TCP, 1408 payload)
  - Bi-directional (same)
  - Yet tracepath reports MTU = 1492, not 1460 ???
  - Something to work on…

User Experience

- Not too divorced from previous work by Chris Holman
- General web browsing
  - Simple web sites – no noticeable difference from ADSL2 (@ ~4Mbps)
  - Simple sites with lots of images – Slight improvement
  - Complex sites – no noticeable difference
- Youtube
  - No noticeable difference, slightly quicker start to play

So is it actually better?

- Large downloads (from mirrors) much quicker
- Upload speed massively better
- Multiplexing much better
  - Multiple users/apps don't interfere with each other
  - Downloads don't interfere with other use
- Wouldn't expect to see much improvement from 50/20 or 100/40

Questions